Product data sheet

LINEDO_4,5M_AS_10001000
9545AS.853.476.702
RZB

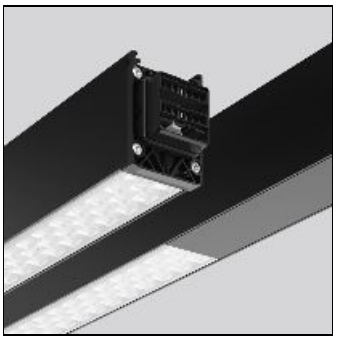

IP 54 IK 03

LINEDO, 43 W, 6500 lm, 850, black, DALI Continuous line luminaire, L 4547 B 58 H 76

Light output 1 (integrated)

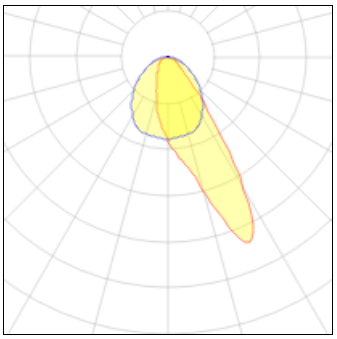

Lamp type	LED	CCT	5000 K
Nominal lamp power	21.5 W	CRI	80
Total flux	3250 lm	LOR	100%
Luminous efficacy	151 lm/W	Total power	21.5 W

Light output 2 (integrated)

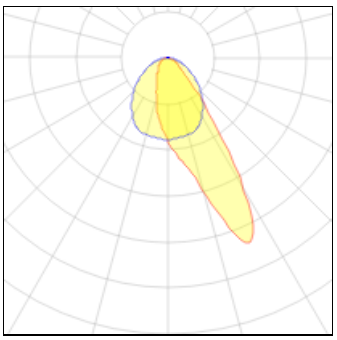

Lamp type	LED	CCT	5000 K
Nominal lamp power	21.5 W	CRI	80
Total flux	3250 lm	LOR	100%
Luminous efficacy	151 lm/W	Total power	21.5 W

Mounting mode

Ceiling mounted

Shape and measurements

Length: 2.28 in
Width: 179.02 in
Height: 2.99 in

Adjustability

Fixed

Electric

System power: 43 W

Protection

IP: 54
IK: 03