Product data sheet

QUADRO SUSPENSION DI/ID BLACK PLF 1404X50
T65H140-9005C2830L3F
PLANLICHT

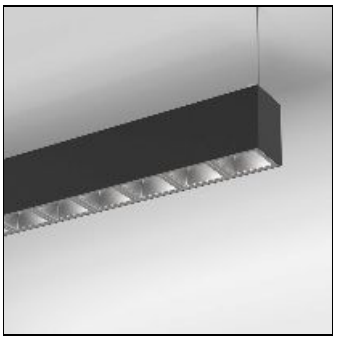

IP 20

LED LO 3000K 34W 4252lm DALI CRI90 https://katalog.planlicht.com/en-gb/fam-quadro/

Light output 1 (integrated)

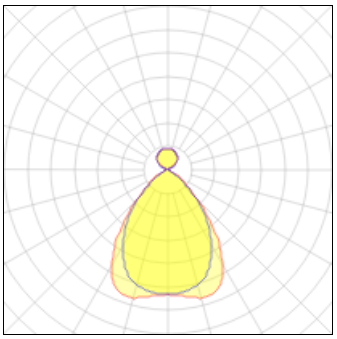

Lamp type	LED	CCT	3000 K
Nominal lamp power	34 W	CRI	90
Total flux	4252 lm	LOR	100%
Luminous efficacy	125 lm/W	Total power	34 W

Mounting mode

Pendant

Shape and measurements

Length: 55.28 in
Width: 1.97 in
Height: 2.60 in

Adjustability

Fixed

Electric

System power: 34 W

Protection

IP: 20