Product data sheet

LK-LED 070.0740.1125.1/DALI - 652072 -°
LK-LED 070.0740.1125.1/DALI - 652072_AOB
LTS LICHT & LEUCHTEN

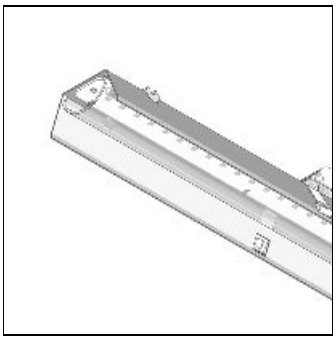

Light output 1 (integrated)

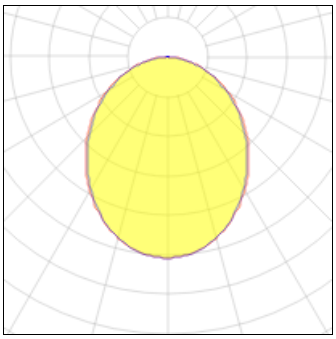

Lamp type	LED	CCT	4000 K
Nominal lamp power	12.5 W	CRI	80
Total flux	1250 lm	LOR	100%
Luminous efficacy	100 lm/W	Total power	12.5 W

Mounting mode

Ceiling recessed

Shape and measurements

Length: 44.29 in
Width: 2.76 in
Height: 3.15 in

Electric

System power: 12.5 W
Appliance Class: I