Product data sheet

LK-LED 070.1030.0705.1/DALI - 652078 -°
LK-LED 070.1030.0705.1/DALI - 652078_AOB
LTS LICHT & LEUCHTEN

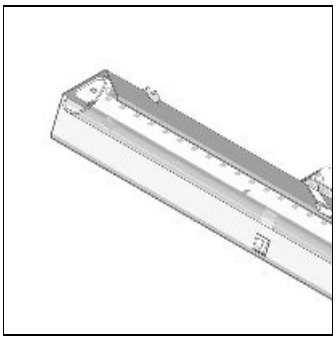

Light output 1 (integrated)

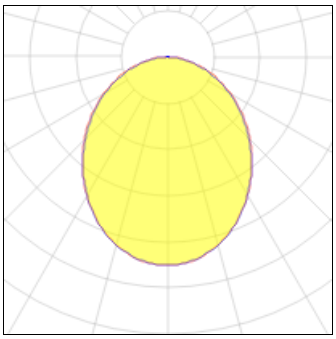

Lamp type	LED	CCT	3000 K
Nominal lamp power	11.4 W	CRI	80
Total flux	1110 lm	LOR	100%
Luminous efficacy	97 lm/W	Total power	11.4 W

Mounting mode

Ceiling recessed

Shape and measurements

Length: 27.76 in
Width: 2.76 in
Height: 3.15 in

Electric

System power: 11.4 W
Appliance Class: I