Product data sheet

LK-LED 070.1130.1405.1/DALI/NO - 652132 -°
LK-LED 070.1130.1405.1/DALI/NO - 652132_AOB
LTS LICHT & LEUCHTEN

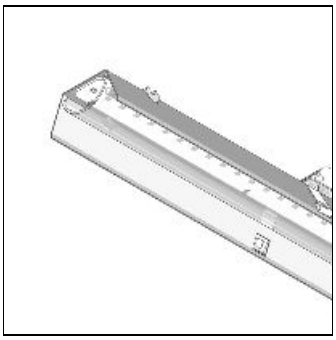

Light output 1 (integrated)

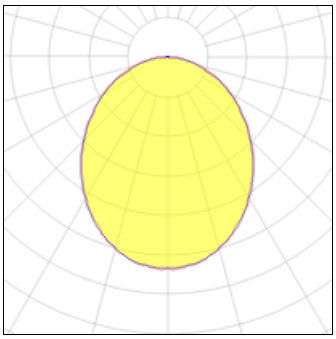

Lamp type	LED	CCT	3000 K
Nominal lamp power	55 W	CRI	80
Total flux	5250 lm	LOR	100%
Luminous efficacy	95 lm/W	Total power	55 W

Mounting mode

Ceiling recessed

Shape and measurements

Length: 55.31 in
Width: 2.76 in
Height: 3.15 in

Electric

System power: 55 W
Appliance Class: I