Product data sheet

DEECOS S MAXI
742230.004.76
RZB

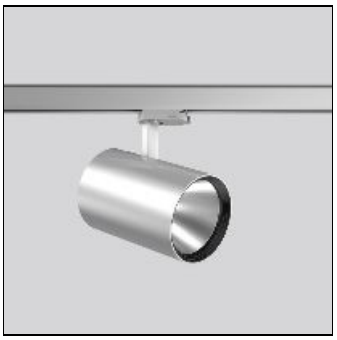

IP 20 IK 06

Series: DEECOS S maxi LED surface-mounted projector in modern design with no visible cooling ribs. Housing made of die-cast aluminium, powder-coated. Rotation range: 356°. Swivel range: 90°. Black plastic ring and recessed LED to prevent glare from the side. Optical assembly with reflector made of MIRO-Silver with 98% total light reflection for outstanding efficiency - can be changed without tools. Special LED for illumination of meat included. With adapter for RZB 3-circuit DALI tracks. Suitable for Track on ceiling, Wall track. High quality converter without flickering and stroboscopic effect. The following accessories can be mounted without use of tools: interchangeable lenses, decorative glasses, honeycomb louvre, clear and frosted diffusers, white interchangeable plastic ring. Colour: silver Diameter: 123 mm Height: 200 mm Lamp: LED Socket: without socket Colour temperature: fresh meat System power: 33 W Rated luminous flux: 2050 lm Beam angle Down: 67° Luminous efficiency: 62 lm/W Control gear: Converter, dimmable, DALI Protection class: I Type of protection: IP 20

Light output 1 (integrated)

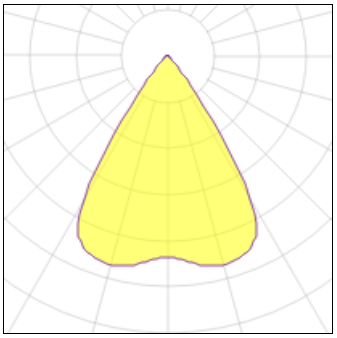

Lamp type	LED	CCT	4000 K
Nominal lamp power	33 W	CRI	90
Total flux	2050 lm	LOR	67%
Luminous efficacy	62 lm/W	ULOR	14%
		Total power	33 W

Mounting mode

Ceiling mounted

Shape and measurements

Height: 7.87 in
Diameter: 4.84 in

Adjustability

Rotatable, Tiltable

Electric

System power: 33 W

Protection

IP: 20
IK: 06