Product data sheet

QUADRO GREEN SUSP. BLACK DI/ID PLF 1124X50
T6GH112-9005C2830H3F
PLANLICHT

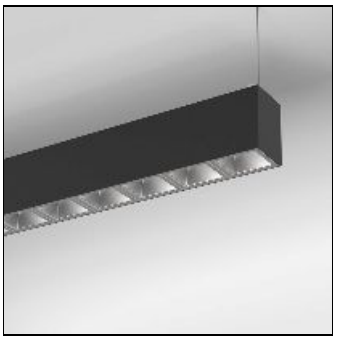

IP 20

LED HO 3000K 45W 5262lm DALI CRI90 https://katalog.planlicht.com/en-gb/fam-quadro/

Light output 1 (integrated)

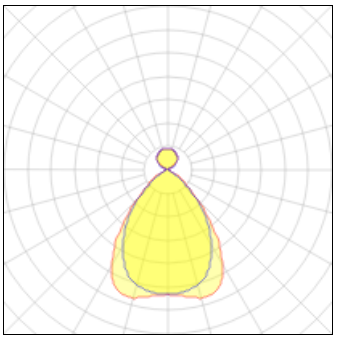

Lamp type	LED	CCT	3000 K
Nominal lamp power	45 W	CRI	90
Total flux	5262 lm	LOR	100%
Luminous efficacy	117 lm/W	Total power	45 W

Mounting mode

Pendant

Shape and measurements

Length: 44.25 in
Width: 1.97 in
Height: 2.60 in

Adjustability

Fixed

Electric

System power: 45 W

Protection

IP: 20